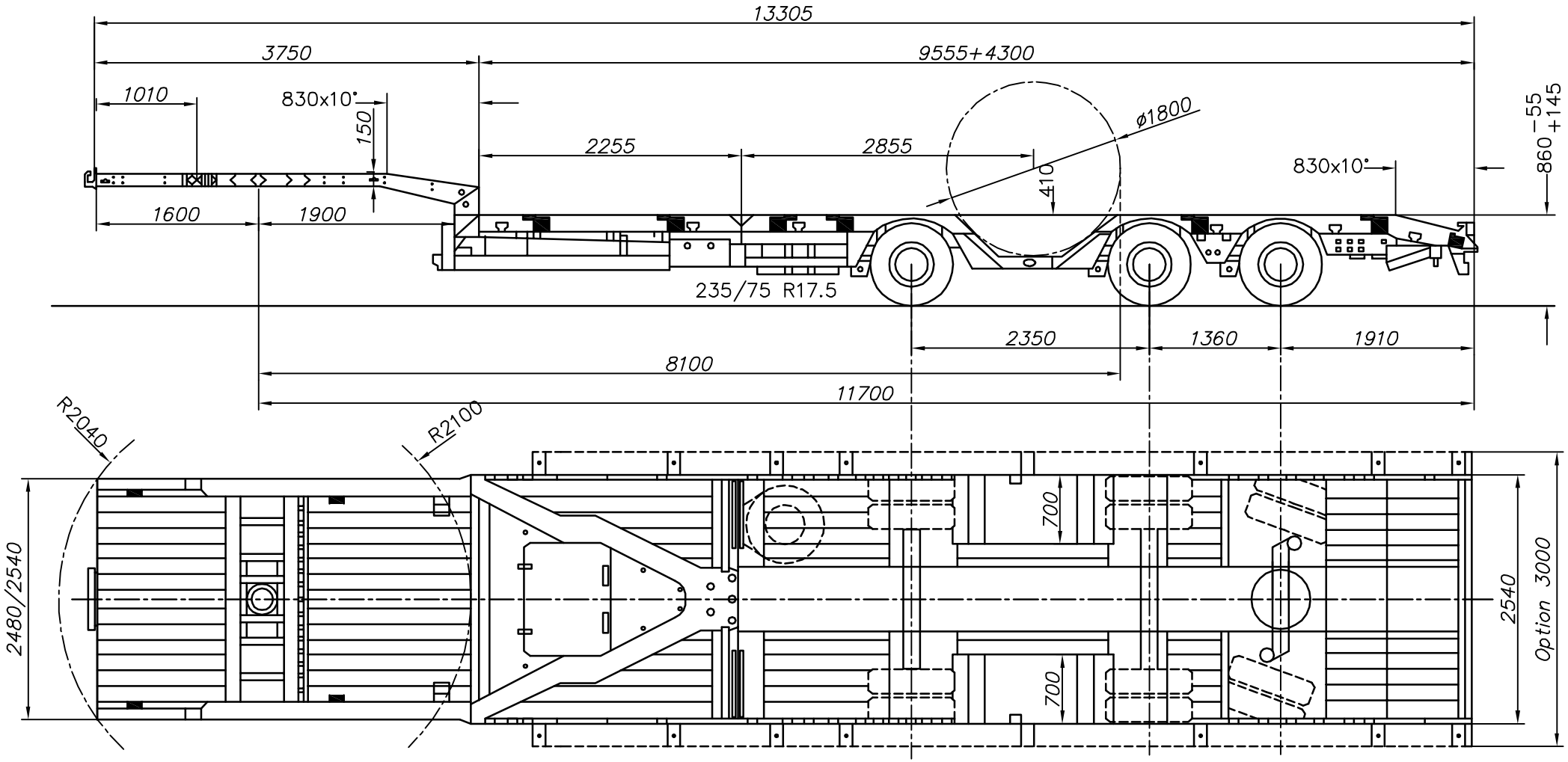
13305
3750
9555+4300
1010
830x10°
150
2255
2855
ø1800
410
830x10°
860 −55 +145
1600
1900
235/75 R17.5
2350
1360
1910
8100
11700
R2040
R2100
2480/2540
700
700
2540
Option 3000